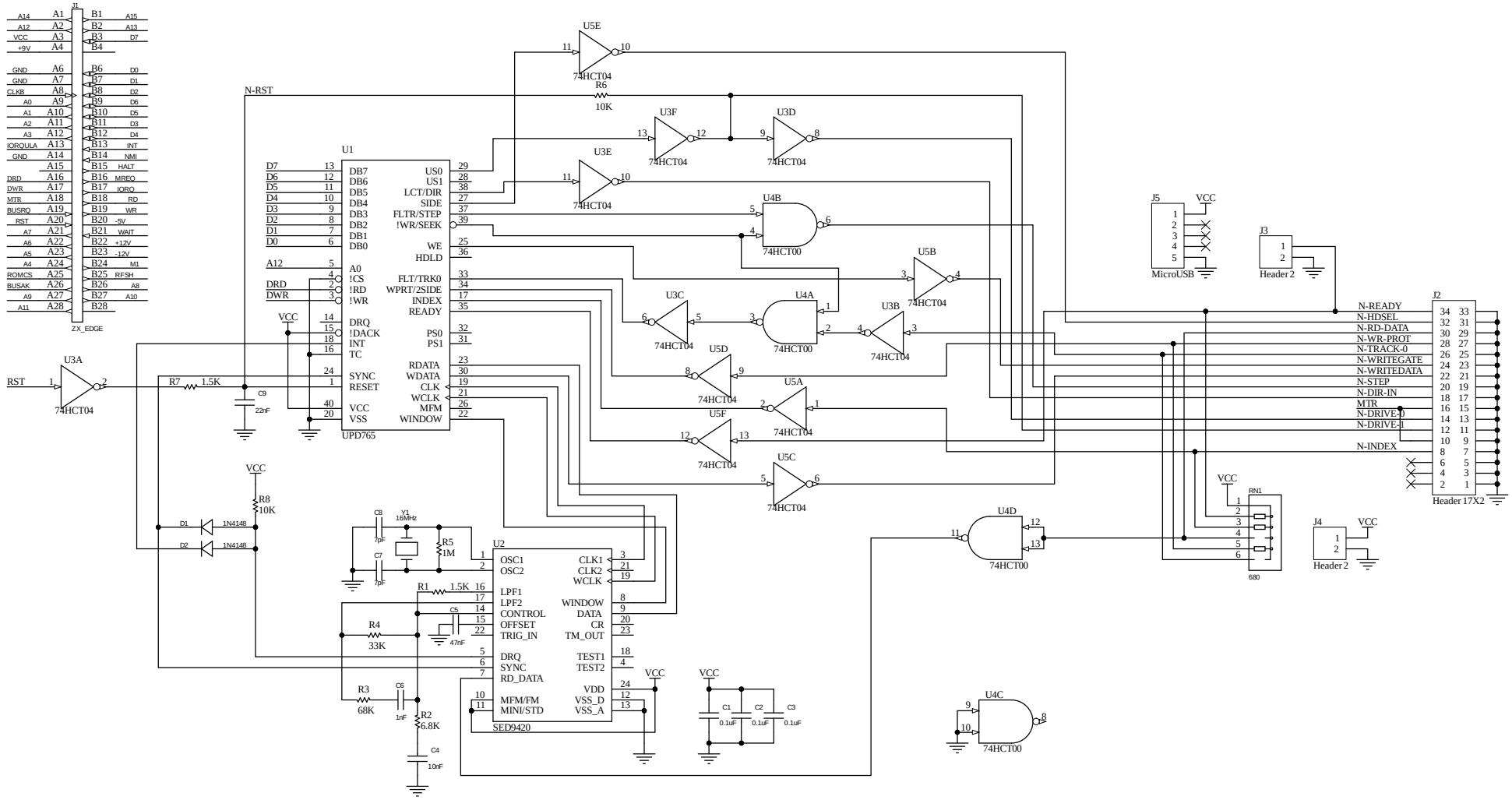

Title		
Size B	Number	Revision
Date: 7/06/2024	Sheet of	
File: C:\My Files\..\Foppy Interface Issue 2a.SchDoc	Drawn By:	